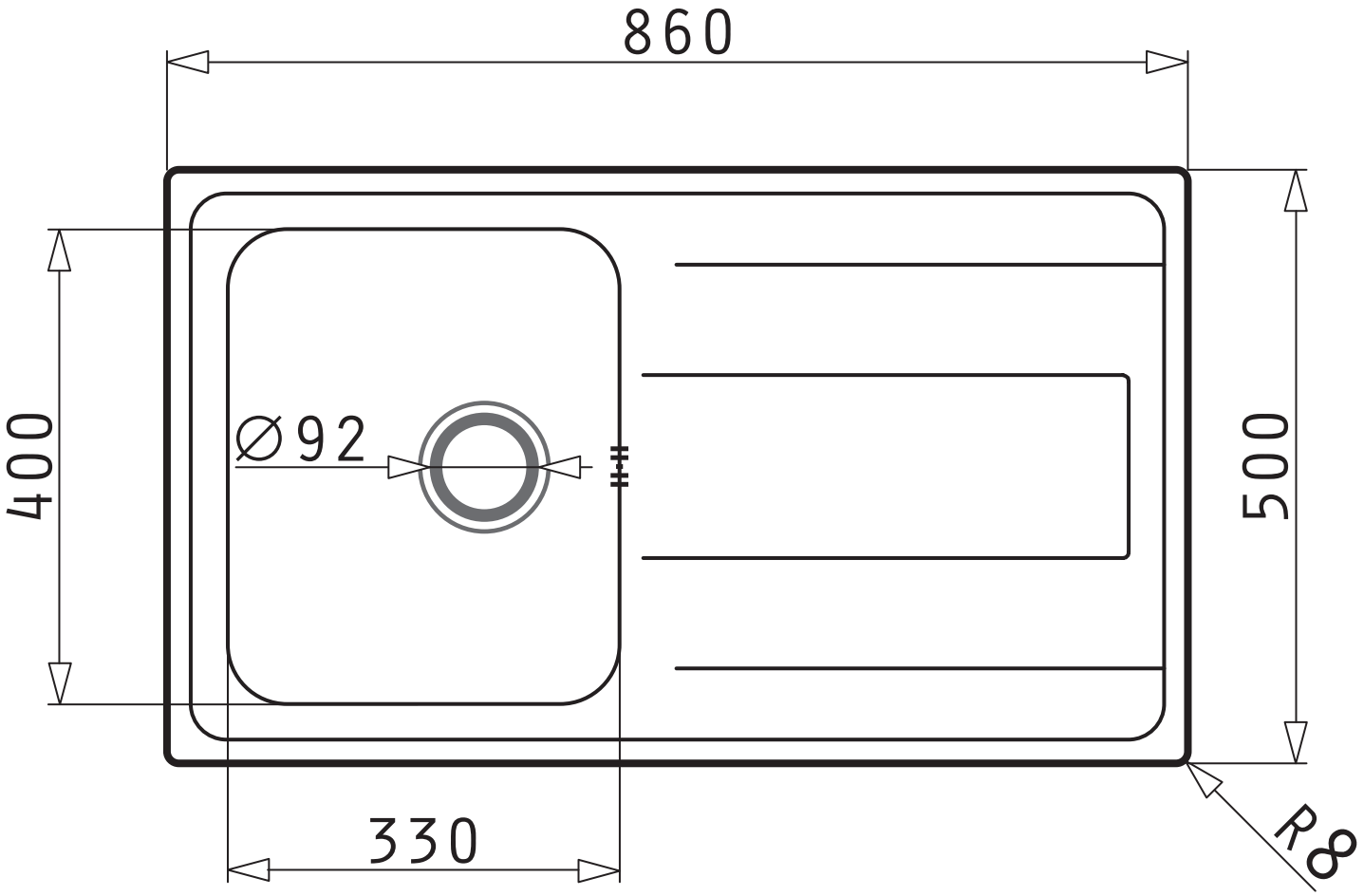
860
400
500
∅92
330
R8